HSF

NOTES:
Current Rating: 2.0AMP
Contact Resistance: 20mΩ Max
Withstand Voltage: 500V AC/DC
Insulation Resistance: 1000MΩ Min
Operation Temperature: -40℃ to +105℃

Contact Material: Phosphor Bronze
Contact Plating: Au or Sn Over Ni
Insulator Material: PBT+30%G.F UL94V-0
COVER LCP; UL-94V-0.

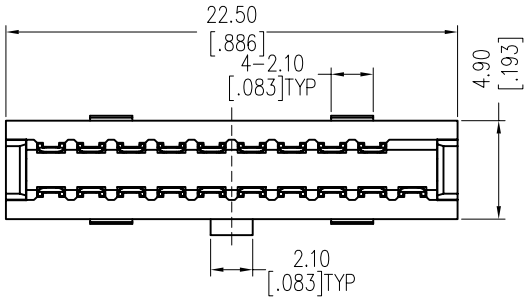

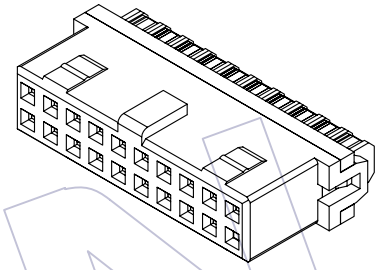

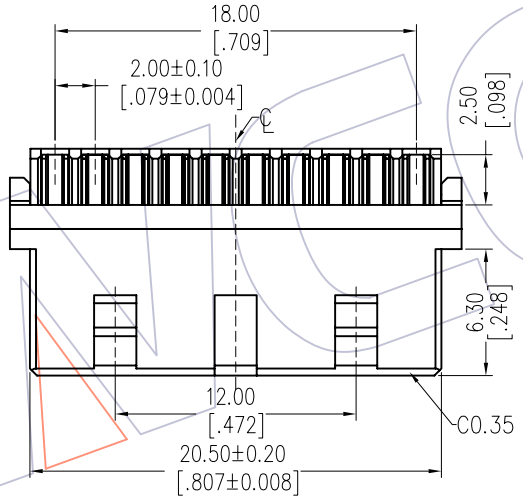

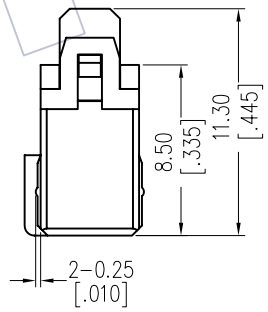

Ordering Information

3126- 2 H 10 B T 1

- 2: Double Row
- H: Solder Line Model
- 10: Odd Row 10PIN
- B: B:BLACK
- T: Packing T=Tube

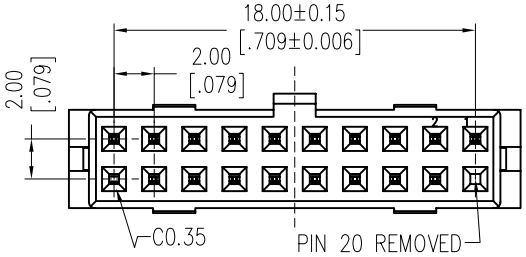

REV	DATE	MODIFICATION DESCRIPTION	CHANGE
A0	2012/09/24	NEW	------

OPERATION	
X.X	±0.40
X.XX	±0.25
X.XXX	±0.15
Angle	± 3°
DIM	TOL

DRAW	JYHuang	DATE	2012/09/24
CHECK		DATE	
APPROVE		DATE	

SCALE	FIT
UNIT	mm
SIZE	A4
SHEET	1/1
PROJ.	

PART NO. 3126-2H10BX1

TITLE: 2.0 Pitch Box Header线端，加后盖焊线式

Customer NO.

WCON
Http: www.wcon.com

WCON-Dongguan
Tel: +86 769 85358920
Fax: +86 769 85358915
E-mail: sales@wcon.com

WCON-Kunshan
Tel: +86 512 57468408
Fax: +86 512 57468468
E-mail: salesks@wcon.com