HSF

Speecification
1.Current Rating: 1.5AMP
2.Contact Resistance: 30mΩ max
3.Insulation Resistance: 1000MΩ min
4.Dielectric Withstanding Voltage: 500V R.M.S
5.Temperature Ratinge: −40℃ to +85℃

Mechanical Characteristics:
6.Mating Force: 3.57kg.min
7.Mating Force: 1.02kg.min
8.Durability: Mandatory: 5000 Cycles

Contact: Copper(T=0.20mm)
Insulator: LCP+30%GF(UL94V−0)
Shell: Brass(T=0.30mm)

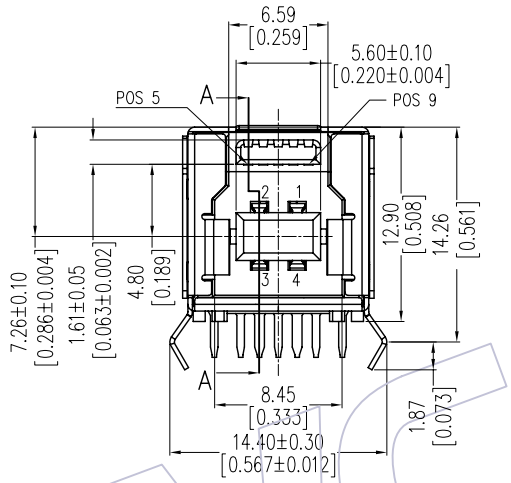

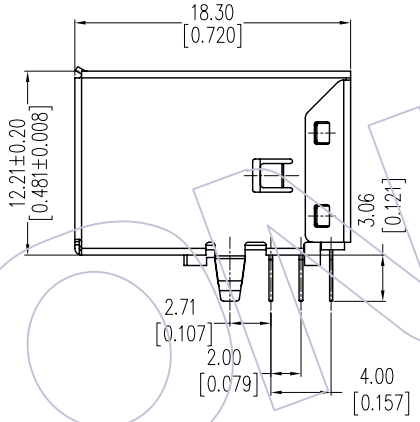

Recommended P.C.B Layout(Top Side)
(PCB BOARD TOLERANCE±0.05)

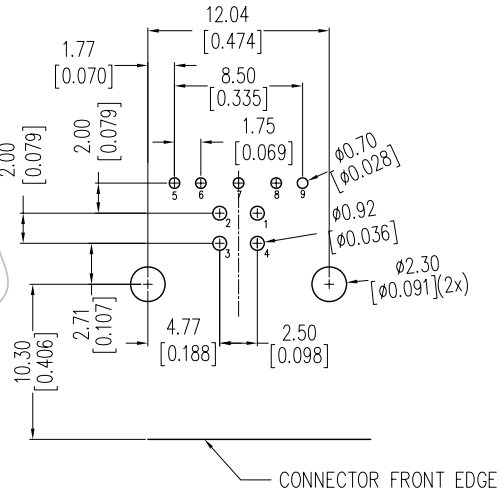

Ordering Information

6112- 09 B F R D XX U N A 1

Contact Plating
S0=Gold Flash/Tin
S1=3u"Gold/Tin
S2=5u"Gold/Tin
S3=10u"Gold/Tin
S4=15u"Gold/Tin
S5=30u"Gold/Tin

Plating
B=Black
W=White
U=Blue
R=Red

Packing: A=Tray

Series No.

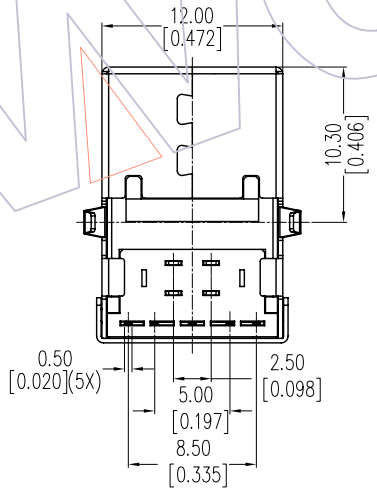

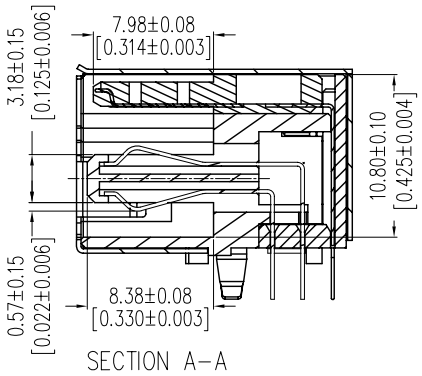

SECTION A−A

REV	DATE	MODIFICATION DESCRIPTION	CHANGE
A0	2012/06/30	NEW	——

OPERATION	
X.X	±0.40
X.XX	±0.25
X.XXX	±0.15
Angle	± 3°
DIM	TOL

DRAW	JYHuang	DATE	2012/06/30
CHECK		DATE	
APPROVE		DATE	

SCALE	FIT
UNIT	mm / inch
SIZE	A4
SHEET	1/1
PROJ.	

PART NO. 6112−09BFRDXXXNA1

TITLE:
USB3.0B−TYPE FEMALE 90°
壳高12.21, H=12.90, 1.87长弯脚DIP

Customer NO.

WCON
Http: www.wcon.com

WCON−Dongguan
Tel: +86 769 85358920
Fax: +86 769 85358915
E−mail: sales@wcon.com

WCON−Kunshan
Tel: +86 512 57468408
Fax: +86 512 57468468
E−mail: salesks@wcon.com