HSF

NOTES:
Rated Current: 0.4AMP
Contact Resistance: 20mΩ max
Withstand Voltage: 200V AC/DC
Insulation Resistance: 500MΩ min
Operation Temperature: −25℃ to +85℃

Terminal: Phosphor Bronze Tin−plated
Fatting Nail: Brass Tin−plated
Housing: LCP+30%GF UL94V−0
Slider: LCP+30%GF UL94V−0

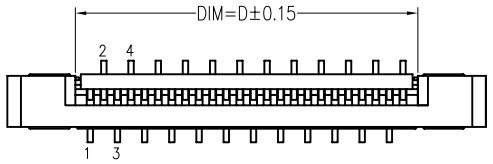

TYPE 2

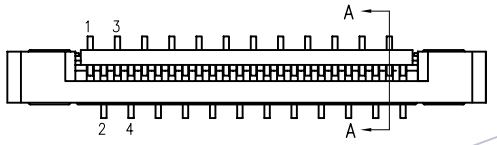

TYPE 1

Recommended P.C.B Layout(Top Side)
(PCB BOARD TOLERANCE±0.05)

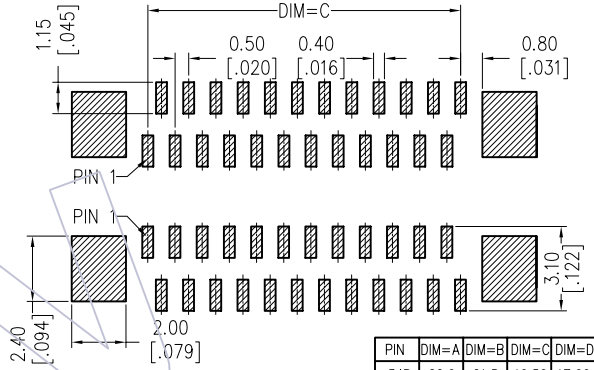

Ordering Information

5140- XX S M U W W X 0X

No.of Pins	Contact Type	Color	Packing	Series NO.
04~60P	U=Up contact	A=Brown B=Black W=White E=Beige	T=Tube R=Reel	01=Type1 02=Type2

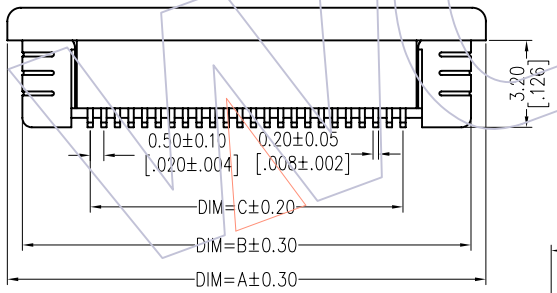

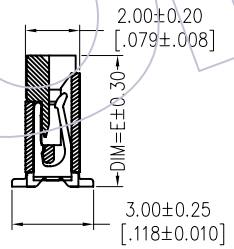

SECTION A−A

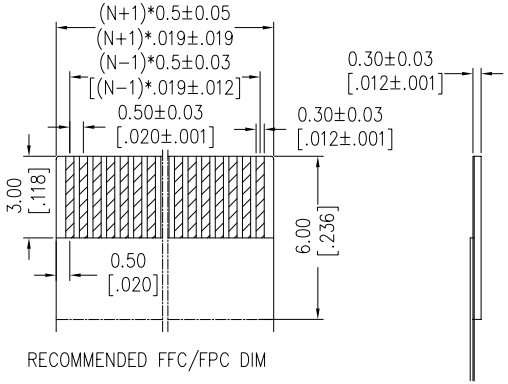

RECOMMENDED FFC/FPC DIM

PIN	DIM=A	DIM=B	DIM=C	DIM=D	DIM=E
60P	35.6	34.5	29.50	30.60	4.9
59P	35.1	34.0	29.00	30.10	
58P	34.6	33.5	28.50	29.60	
57P	34.1	33.0	28.00	29.10	
56P	33.6	32.5	27.50	28.60	
55P	33.1	32.0	27.00	28.10	
54P	32.6	31.5	26.50	27.60	
53P	32.1	31.0	26.00	27.10	
52P	31.6	30.5	25.50	26.60	
51P	31.1	30.0	25.00	26.10	
50P	30.6	29.5	24.50	25.60	
49P	30.1	29.0	24.00	25.10	
48P	29.6	28.5	23.50	24.60	
47P	29.1	28.0	23.00	24.10	
46P	28.6	27.5	22.50	23.60	
45P	28.1	27.0	22.00	23.10	
44P	27.6	26.5	21.50	22.60	
43P	27.1	26.0	21.00	22.10	
42P	26.6	25.5	20.50	21.60	
41P	26.1	25.0	20.00	21.10	
40P	25.6	24.5	19.50	20.60	
39P	25.1	24.0	19.00	20.10	
38P	24.6	23.5	18.50	19.60	
37P	24.1	23.0	18.00	19.10	
36P	23.6	22.5	17.50	18.60	
35P	23.1	22.0	17.00	18.10	

PIN	DIM=A	DIM=B	DIM=C	DIM=D	DIM=E
34P	22.6	21.5	16.50	17.60	4.4
33P	22.1	21.0	16.00	17.10	
32P	21.6	20.5	15.50	16.60	
31P	21.1	20.0	15.00	16.10	
30P	20.6	19.5	14.50	15.60	
29P	20.1	19.0	14.00	15.10	
28P	19.6	18.5	13.50	14.60	
27P	19.1	18.0	13.00	14.10	
26P	18.6	17.5	12.50	13.60	
25P	18.1	17.0	12.00	13.10	
24P	17.6	16.5	11.50	12.60	
23P	17.1	16.0	11.00	12.10	
22P	16.6	15.5	10.50	11.60	
21P	16.1	15.0	10.00	11.10	
20P	15.6	14.5	9.50	10.60	
19P	15.1	14.0	9.00	10.10	
18P	14.6	13.5	8.50	9.60	
17P	14.1	13.0	8.00	9.10	
16P	13.6	12.5	7.50	8.60	
15P	13.1	12.0	7.00	8.10	
14P	12.6	11.5	6.50	7.60	
13P	12.1	11.0	6.00	7.10	
12P	11.6	10.5	5.50	6.60	
11P	11.1	10.0	5.00	6.10	
10P	10.6	9.5	4.50	5.60	
9P	10.1	9.0	4.00	5.10	
8P	9.6	8.5	3.50	4.60	
7P	9.1	8.0	3.00	4.10	
6P	8.6	7.5	2.50	3.60	
5P	8.1	7.0	2.00	3.10	
4P	7.6	6.5	1.50	2.60	

REV	DATE	MODIFICATION DESCRIPTION	CHANGE
A0	12/07/04	NEW	——

OPERATION	
X.X	±0.40
X.XX	±0.25
X.XXX	±0.15
Angle	± 3°
DIM	TOL

DRAW	JYHuang	DATE	2012/07/04
CHECK		DATE	
APPROVE		DATE	

SCALE	FIT
UNIT	mm / inch
SIZE	A4
SHEET	1/1
PROJ.	

PART NO. 5140-XXSMUWXX0X

TITLE:
0.50 FPC 180° SMT UP CONTACT WITH LOCK
H=2.0mm

Customer NO.

WCON
Http: www.wcon.com

WCON−Dongguan
Tel: +86 769 85358920
Fax: +86 769 85358915
E-mail: sales@wcon.com

WCON−Kunshan
Tel: +86 512 57468408
Fax: +86 512 57468468
E-mail: salesks@wcon.com