HSF

NOTES:
Rated Current:3.0A
Rated Voltage:250V AC/DC
Contact Resistance:20mΩ max
Withstand Voltage:1000V AC/Minute
Insulation Resistance:1000MΩ min
Operation Temperature:−25℃ to+85℃
Insulator Material:High Temperature Plastic(UL94V−0/2)

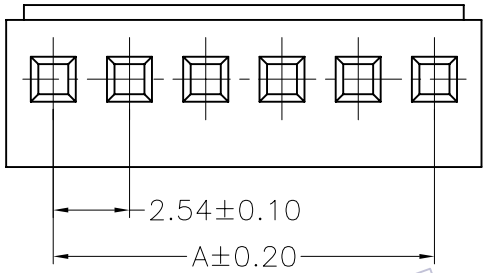

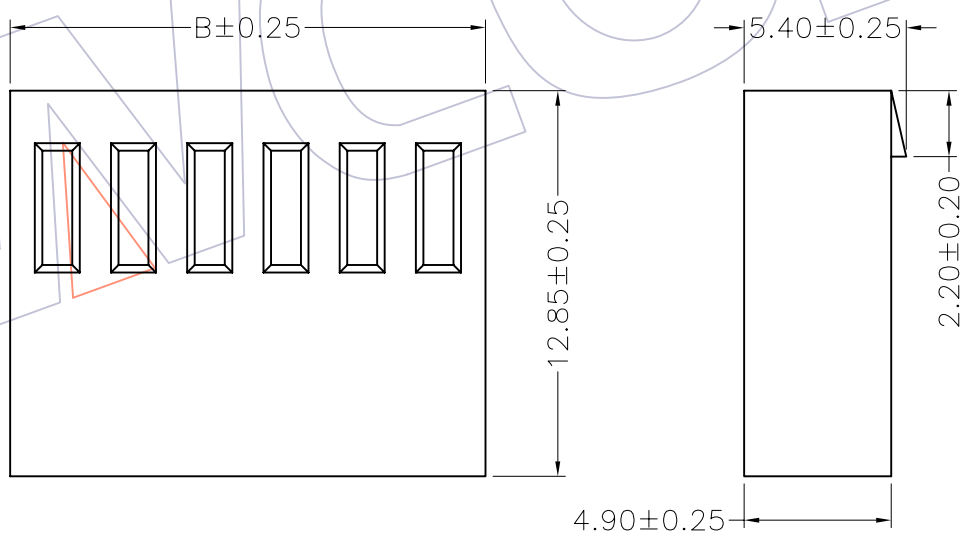

Ordering Information

WF2544 -H XX X 01

- XX: No.of pins 02P~20P
- X: Color E=Beige W=White B=Black
- 01: Packing 0=PE Bag

Dimensional & Ordering Information

Circuit	Part No.	Dimension	
		A	B
02	WF2544−H02X01	2.54	5.68
03	WF2544−H03X01	5.08	8.22
04	WF2544−H04X01	7.62	10.76
05	WF2544−H05X01	10.16	13.30
06	WF2544−H06X01	12.70	15.84
07	WF2544−H07X01	15.24	18.38
08	WF2544−H08X01	17.78	20.92
09	WF2544−H09X01	20.32	23.46
10	WF2544−H10X01	22.86	26.00
11	WF2544−H11X01	25.40	28.54
12	WF2544−H12X01	27.94	31.08
13	WF2544−H13X01	30.48	33.62
14	WF2544−H14X01	33.02	36.16
15	WF2544−H15X01	35.56	38.70
16	WF2544−H16X01	38.10	41.24
17	WF2544−H17X01	40.64	43.78
18	WF2544−H18X01	43.18	46.32
19	WF2544−H19X01	45.72	48.86
20	WF2544−H20X01	48.26	51.40

REV	DATE	MODIFICATION DESCRIPTION	CHANGE	APPROVE
A0	08/08/04	NEW	———	———

OPERATION	
X.X	±0.30
X.XX	±0.25
X.XXX	±0.15
Angle	± 3°
DIM	TOL

DRAW	WEIXD	08/08/04
DESIGN		
CHECK		
APPROVE		

SCALE	1:1
UNIT	mm
SIZE	A4
SHEET	1/1
PROJ.	

WCON 维峰五金电子有限公司
WAFE HARDWARE ELECTRONICS CO.LTD

PART NO.	SEE TAB
TITLE:	2.54 HOUSING
Customer NO.	

WCON