HSF

NOTES:
Rated Current:3.0AMP
Contact Resistance:20mΩ max
Withstand Voltage:1000V AC/DC
Insulation Resistance:1000MΩ min
Operation Temperature:−25℃ to +85℃

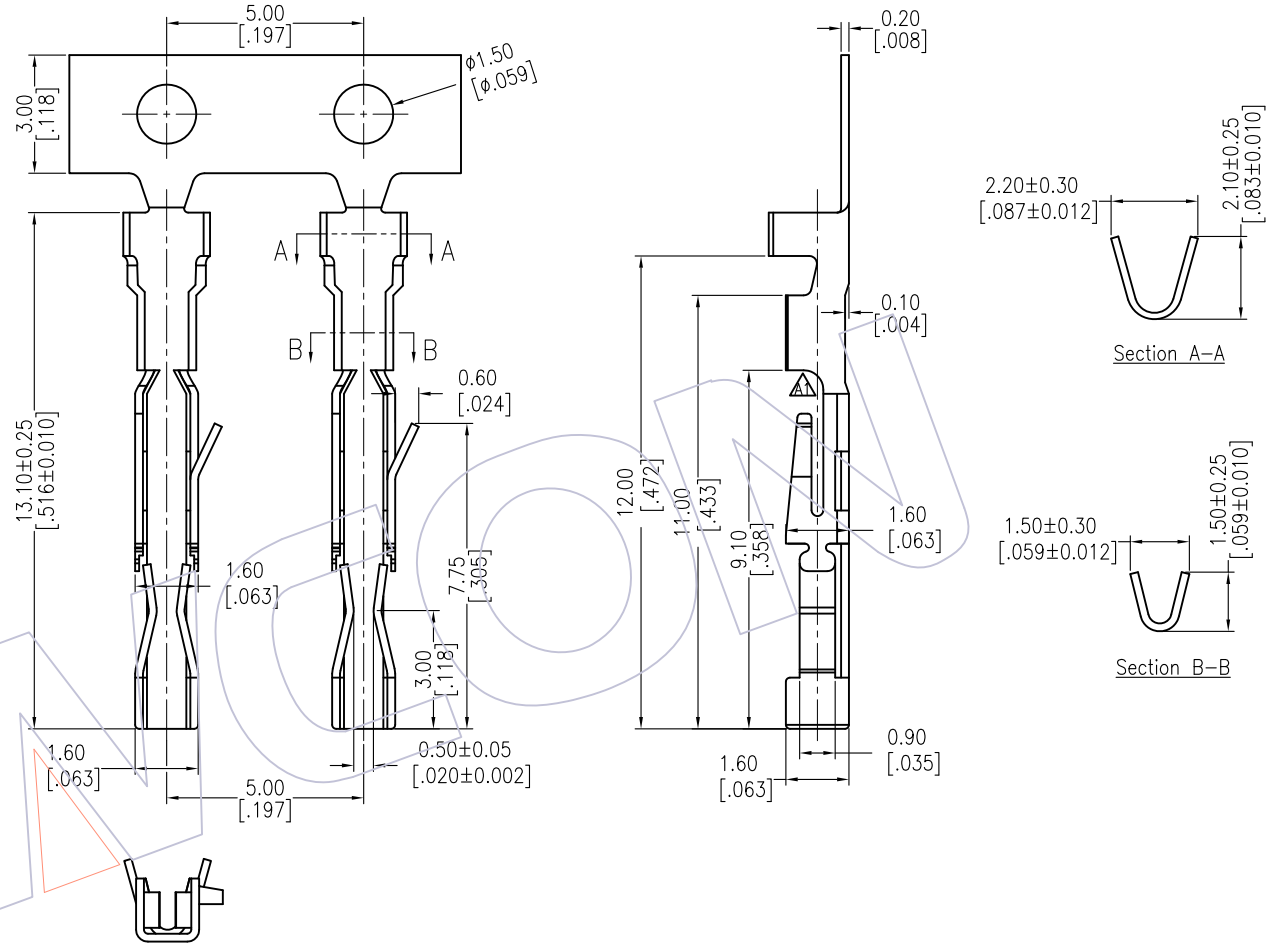

Ordering Information

WF2547 - T X XX 01

Materlal
B=Brass
P=Phosphor bronze

Contact Plating
G0=Gold Flash
G3=10u"Gold
G4=15u"Gold
G5=30u"Gold
S0=Gold Flash/Tin
S3=10u"Gold/Tin
S4=15u"Gold/Tin
S5=30u"Gold/Tin
SN=Tin

Dimensional & Ordering Information

Part No.	Thickness	Materlal	Finish	Wire Range	Insulation O.D
WF2547–TBSN01	0.20	Brass	Tin–Plated	AWG#22~#28	1.50mm(Max.)
WF2547–TPSN01	0.20	Phosphor bronze	Tin–Plated	AWG#22~#28	1.50mm(Max.)

REV	DATE	MODIFICATION DESCRIPTION	CHANGE
A1	2017/06/29	Modify	——
A0	2012/09/28	NEW	——

OPERATION	
X.X	±0.40
X.XX	±0.25
X.XXX	±0.15
Angle	± 3°
DIM	TOL

DRAW Ding	DATE 2017/06/29	SCALE	FIT
CHECK	DATE	UNIT	mm
APPROVE	DATE	SIZE	A4
		SHEET	1/1
		PROJ.	

PART NO. SEE TABLE

TITLE: "T" TYPE 2.54mm Terminal

Customer NO.

WCON
Http: www.wcon.com

WCON–Dongguan
Tel: +86 769 85358920
Fax: +86 769 85358915
E-mail: sales@wcon.com

WCON–Kunshan
Tel: +86 512 57468408
Fax: +86 512 57468468
E-mail: salesks@wcon.com