HSF

NOTES:
Rated Current:1.0AMP
Rated Voltage:150V AC/DC
Contact Resistance:30mΩ max
Withstand Voltage:500V AC/Minute
Insulation Resistance:500MΩ min
Operation Temperature:-25℃ to +85℃

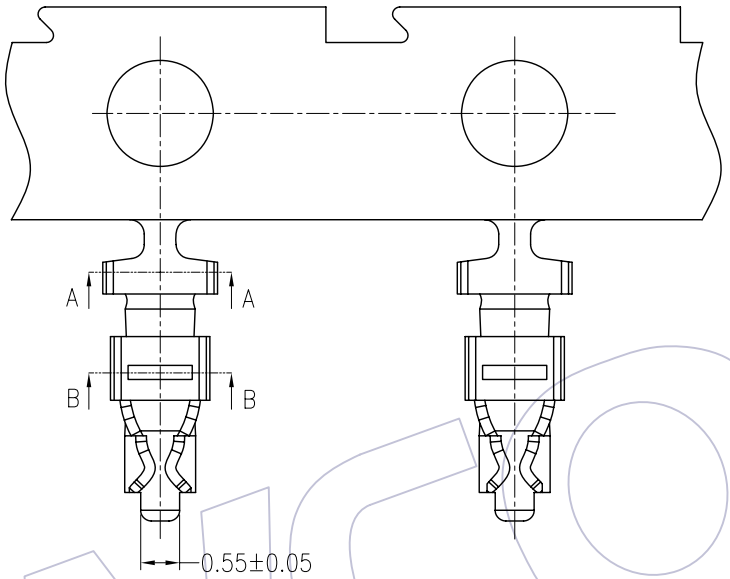

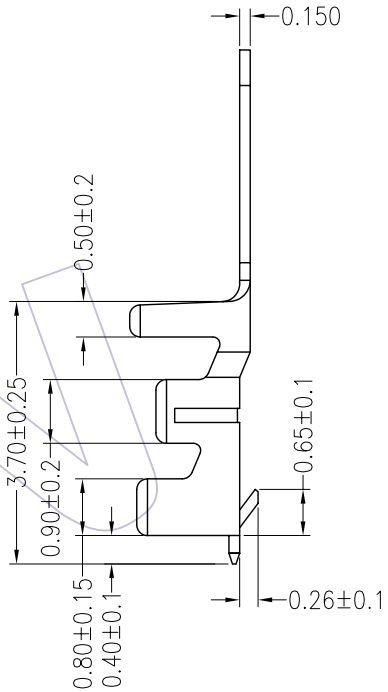

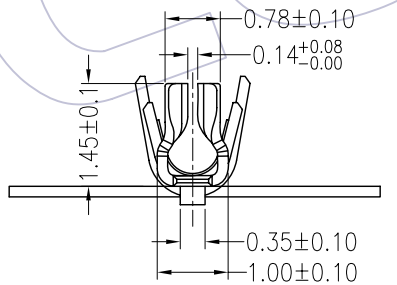

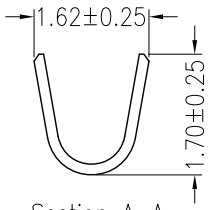

Section A-A

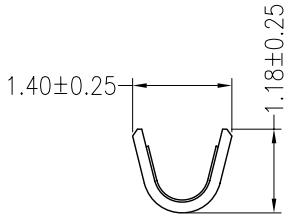

Section B-B

Ordering Information

WF 1253 - T P XX 0 1

Contact Plating
G0=Gold Flash
G1=3u"Gold
G2=5u"Gold
G3=10u"Gold
G4=15u"Gold
G5=30u"Gold
S0=Gold Flash/Tin
S1=3u"Gold/Tin
S2=5u"Gold/Tin
S3=10u"Gold/Tin
S4=15u"Gold/Tin
S5=30u"Gold/Tin
SN=Tin

Specification & Ordering Information:

Part No.	Thickness	Material	Finish	Wire Range	Insulation O.D	Q'ty/Reel
WF1253-TPG001	0.15	Phosphor bronze	Gold Flash	AWG#26~#30	1.00mm Max.	10,000PCS
WF1253-TPSN01	0.15	Phosphor bronze	Tin plated	AWG#26~#30	1.00mm Max.	10,000PCS

REV	DATE	MODIFICATION DESCRIPTION	CHANGE	APPROVE
A0	08/07/29	NEW	———	———

OPERATION		DRAW	William Chen	08.07.29
X.X	±0.25	DESIGN		
X.XX	±0.15			
X.XXX	±0.05	CHECK		
Angle	± 3°			
DIM	TOL	APPROVE		

SCALE	1:1
UNIT	mm
SIZE	A4
SHEET	1/1
PROJ.	

WCON 维峰五金电子有限公司
WAFE HARDWARE ELECTRONICS CO.LTD

PART NO.	SEE TAB
TITLE:	1.25mm TERMINAL
Customer NO.	