HSF

NOTES:
Current Rating:3A
Voltage Rating:250V AC,DC
Contact Resistance:20mΩ max
Withstand Voltage:800V AC/minute
Insulation Resistance:1000MΩ min
Operation Temperature:−25℃ to +85℃
Insulator Material:PA66(UL94V−0)

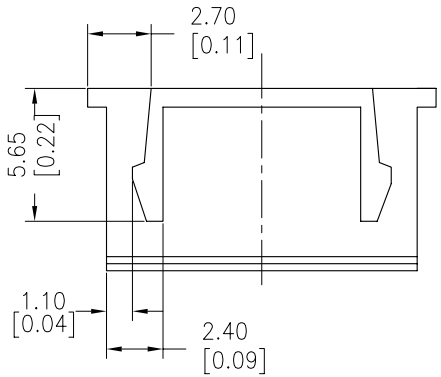

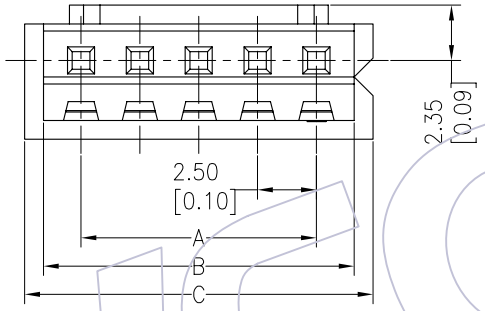

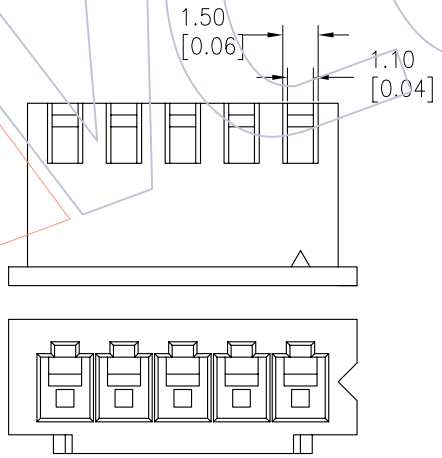

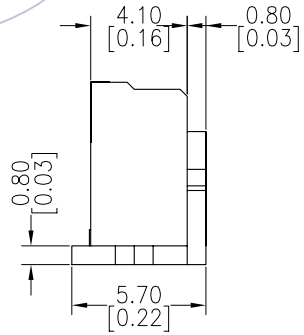

Ordering Information

WF2501 - H XX X 01

- XX: No.of pins 02P~16,20P
- X: Color E=Beige W=White
- 01: Packing 0=PE Bag

Circuit	A	B	C
02	2.5	5.7	7.3
03	5.0	8.2	9.8
04	7.5	10.7	12.3
05	10.0	13.2	14.8
06	12.5	15.7	17.3
07	15.0	18.2	19.8
08	17.5	20.7	22.3
09	20.0	23.2	24.8
10	22.5	25.7	27.3
11	25.0	28.2	29.8
12	27.5	30.7	32.3
13	30.0	33.2	34.8
14	32.5	35.7	37.3
15	35.0	38.2	39.8
16	37.5	40.7	42.3
20	47.5	50.7	52.3

REV	DATE	MODIFICATION DESCRIPTION	CHANGE
A0	2012/02/13	NEW	——

OPERATION	
X.X	±0.40
X.XX	±0.25
X.XXX	±0.15
Angle	± 3°
DIM	TOL

DRAW	BEN	DATE	2012/01/03
CHECK		DATE	
APPROVE		DATE	

SCALE	FIT
UNIT	mm
SIZE	A4
SHEET	1/1
PROJ.	

PART NO. WF2501-HXXX01

TITLE: "J" XH2.50 HOUSING

Customer NO.

WCON
Http: www.wcon.com

WCON-Dongguan
Tel: +86 769 85358920
Fax: +86 769 85358915
E-mail: sales@wcon.com

WCON-Kunshan
Tel: +86 512 57468408
Fax: +86 512 57468468
E-mail: wconks@wcon.com