HSF

NOTES:
Rated Current:9.0AMP
Contact Resistance:20mΩ max
Withstand Voltage:500V AC/DC
Insulation Resistance:100MΩ min
Operation Temperature:−25℃ to +85℃

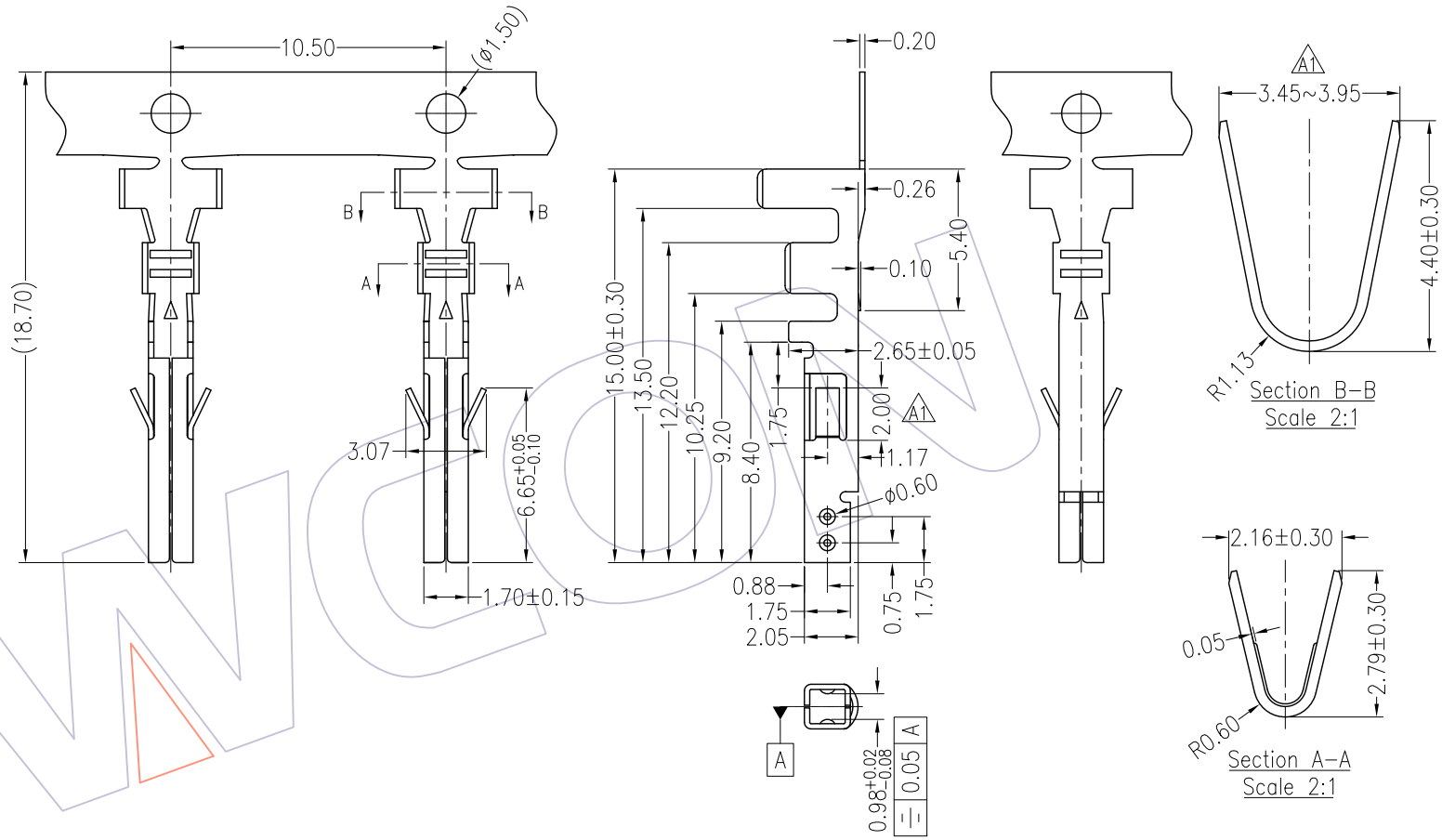

Ordering Information

WF4202 - T X XX 0 1

Material	Contact Plating
B=Brass	G0=Gold Flash
P=Phosphor bronze	G3=10u"Gold
	G4=15u"Gold
	G5=30u"Gold
	S0=Gold Flash/Tin
	S3=10u"Gold/Tin
	S4=15u"Gold/Tin
	S5=30u"Gold/Tin
	SN=Tin

Specification & Ordering Information:

Part No.	Thickness	Finish	Material	Wire Range	Insulation O.D	Q'ty/Reel
WF4202−TXG001	0.20	Gold−flash	Phosphor bronze/Brass	AWG#18~#24	3.10mm(Max)	4,000pcs
WF4202−TXSN01	0.20	Tin−Plated	Phosphor bronze/Brass	AWG#18~#24	3.10mm(Max)	4,000pcs

REV	DATE	MODIFICATION DESCRIPTION	CHANGE
A1	2016/06/07	Change The Dimension	
A0	2012/09/17	NEW	——

OPERATION	
X.X	±0.40
X.XX	±0.25
X.XXX	±0.15
Angle	± 3°
DIM	TOL

DRAW Sam Zheng	DATE 2016/06/07	SCALE	FIT
		UNIT	mm inch
CHECK	DATE	SIZE	A4
APPROVE	DATE	SHEET	1/1
		PROJ.	

PART NO. SEE TAB

TITLE: 4.20mm TERMINAL FEMALE

Customer NO.

WCON
Http: www.wcon.com

WCON−Dongguan
Tel: +86 769 85358920
Fax: +86 769 85358915
E-mail: sales@wcon.com

WCON−Kunshan
Tel: +86 512 57468408
Fax: +86 512 57468468
E-mail: salesks@wcon.com