HSF

NOTES:
Current Rating: 3.0AMP
Contact Resistance: 20mΩ Max
Withstand Voltage: 1000V AC/DC
Insulation Resistance: 1000MΩ Min
Operation Temperature: −40℃ to +105℃

Contact Material: Phosphor Bronze
Contact plating: Au Or Sn over Ni
Insulator Material: PA9T+30%G.F UL94V−0

Recommended P.C.B Layout(Top Side)
(PCB BOARD TOLERANCE±0.05)

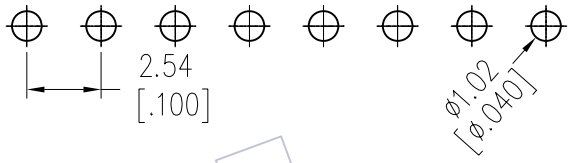

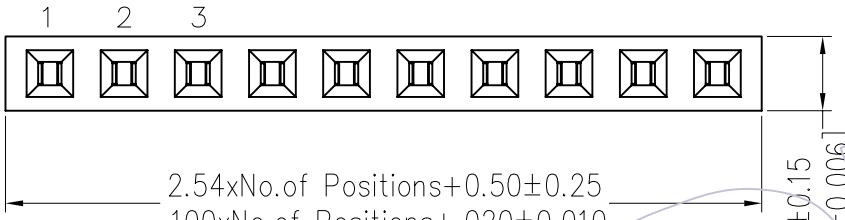

Ordering Information

2145 - 1 XX S XX X U N T 1

- XX: No.of Pins per ROW:01~40PIN
- XX: Contact Plating:
  G0=Gold Flash
  G3=10μ"Gold
  G4=15μ"Gold
  G5=30μ"Gold
  S0=Gold Flash/Tin
  S3=10μ"Gold/Tin
  S4=15μ"Gold/Tin
  S5=30μ"Gold/Tin
  SN=Tin
  SM=Matte Tin
- X: Insulator:
  A=PBT
  C=PA9T
- T: Packing:
  T=Tube

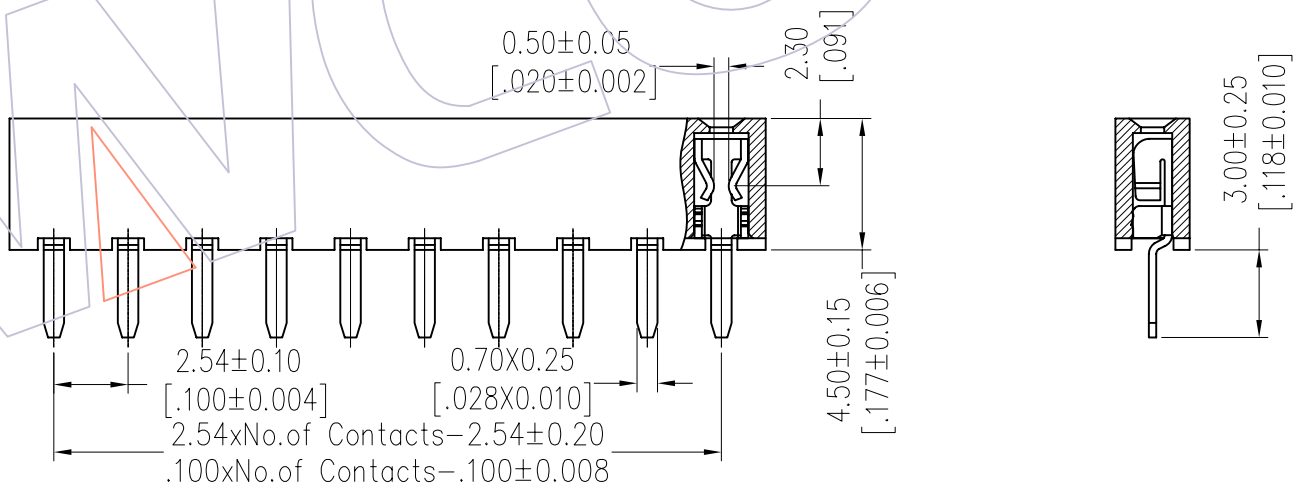

Item	Pitch	Mating
Standard	2.54	1115/1120/1125
Alternate		

REV	DATE	MODIFICATION DESCRIPTION	CHANGE
A0	2012/08/03	NEW	------

OPERATION	
X.X	±0.40
X.XX	±0.25
X.XXX	±0.15
Angle	± 3°
DIM	TOL

DRAW	JYHuang	DATE	2012/08/03
CHECK		DATE	
APPROVE		DATE	

SCALE	FIT
UNIT	mm
SIZE	A4
SHEET	1/1
PROJ.	

PART NO. 2145-1XXSXXXUNT1

TITLE: FH2.54 SINGLE ROW 180° DIP H=4.5

Customer NO.

WCON
Http: www.wcon.com

WCON-Dongguan
Tel: +86 769 85358920
Fax: +86 769 85358915
E-mail: sales@wcon.com

WCON-Kunshan
Tel: +86 512 57468408
Fax: +86 512 57468468
E-mail: salesks@wcon.com

WCON