HSF

NOTES:
Current Rating: 1.0AMP
Contact Resistance: 10mÙ Max
Withstand Voltage: 1000V AC/DC
Mechanical Life: Min 100 cycles
Connecting Pin: ø0.50mm
Operation Temperature: −40°C to+105°C

Contact Material: Brass CuZn36Pb3(C36000)
Contact plating: Au over Ni
Insulator Material: PPS+30%G.F UL94V−0
06P~18P Insulators without center bar
20P~28P Insulators with center one bar

Ordering Information

3560-301 XX M XX 102 X 1

- Row of Pitch: 1=7.62mm
- No. of Pin: See tab
- Contact Plating: G0=Gold Flash, G3=10u"Gold, G4=15u"Gold, G5=30u"Gold
- Packing: T=Tube, R=Tape&Reel

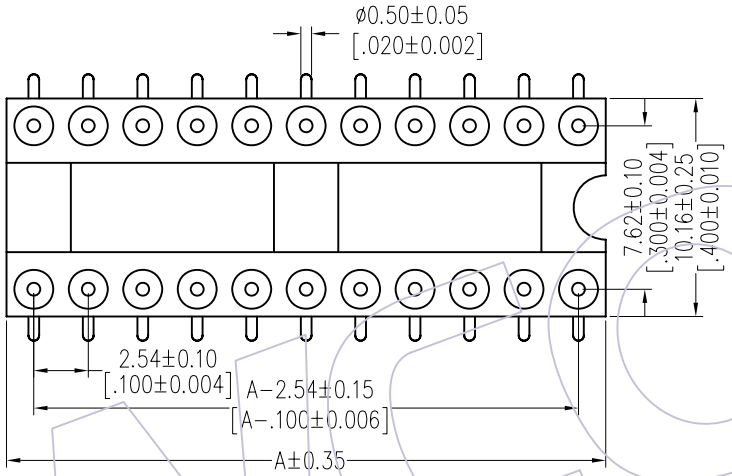

Recommended P.C.B Layout(Top Side)
(PCB BOARD TOLERANCE±0.05)

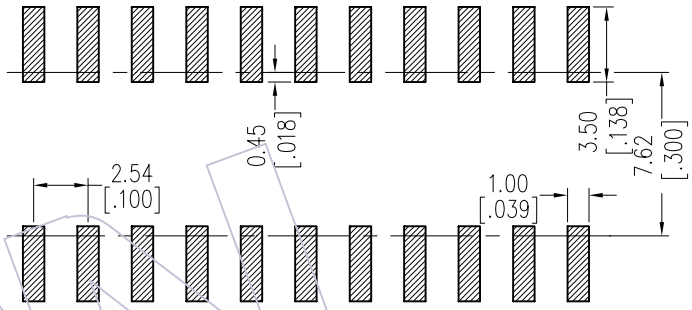

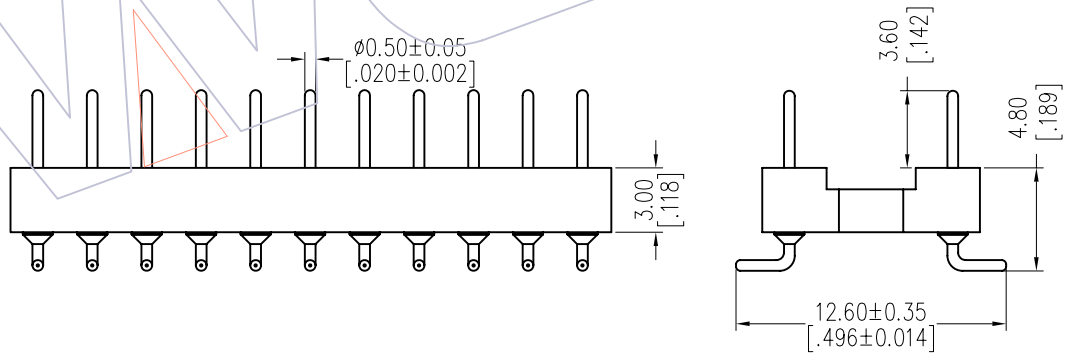

Dimensional & Ordering Information

NO.of Poles	Part No.	Dim A
06	3560−30106MXX102X1	7.62
08	3560−30108MXX102X1	10.16
10	3560−30110MXX102X1	12.70
12	3560−30112MXX102X1	15.24
14	3560−30114MXX102X1	17.78
16	3560−30116MXX102X1	20.32
18	3560−30118MXX102X1	22.86
20	3560−30120MXX102X1	25.40
22	3560−30122MXX102X1	27.94
24	3560−30124MXX102X1	30.48
28	3560−30128MXX102X1	35.56

REV	DATE	MODIFICATION DESCRIPTION	CHANGE
A0	2012/11/05	NEW	------

OPERATION	
X.X	±0.40
X.XX	±0.25
X.XXX	±0.15
Angle	± 3°
DIM	TOL

DRAW	JYHuang	DATE	2012/11/05
CHECK		DATE	
APPROVE		DATE	

SCALE	FIT
UNIT	mm
SIZE	A4
SHEET	1/1
PROJ.	

PART NO.
SEE TAB

TITLE:
2.54mm MACHINED ADAPTER CONNECTOR
SMT H=3.0 L=10.20 Row of Pitch 7.62

Customer NO.

WCON
Http: www.wcon.com

WCON−Dongguan
Tel: +86 769 85358920
Fax: +86 769 85358915
E-mail: sales@wcon.com

WCON−Kunshan
Tel: +86 512 57468408
Fax: +86 512 57468468
E-mail: salesks@wcon.com

WCON