HSF

TECHNICAL SPECS:
Current Rating: 1.0AMP
Contact Resistance: 10mΩ Max
Dielectric Strength: Min 1000VRMS
Mechanical Life: Min 100 cycles
Mating Pin: ø0.40 to ø0.56mm
Forces: (polished steel gauge ø0.43mm)
Insertion: 200g Max/Pin, Withdrawal: 60g Min/Pin
Operation Temperature: −40°C to +105°C

Sleeve: Brass CuZn36Pb3(C36000), Sn over Ni
Contact Clip(4 finger): BeCu(C17200), Au or Sn over Ni
Insulator Material: PPS+30%G.F(UL94V−0)
24P~32P Insulators with center one bar
36P~48P Insulators with center two bar

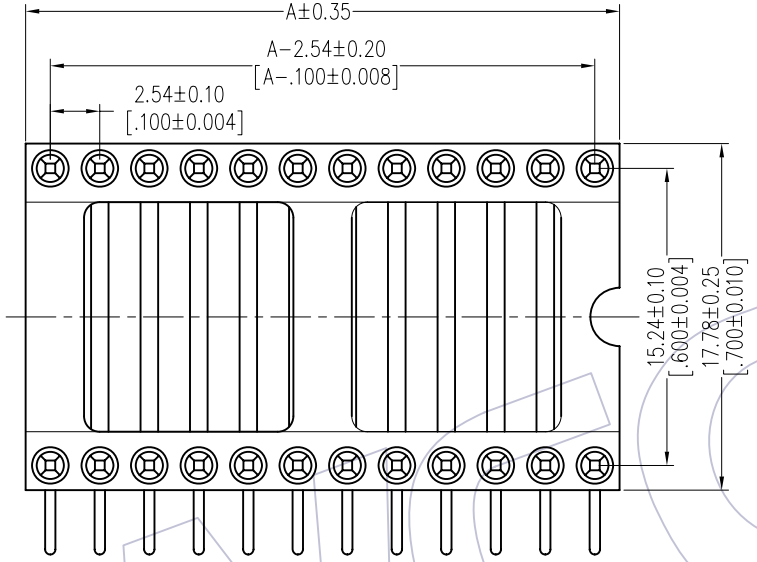

Recommended P.C.B Layout(Top Side)
(PCB BOARD TOLERANCE±0.05)

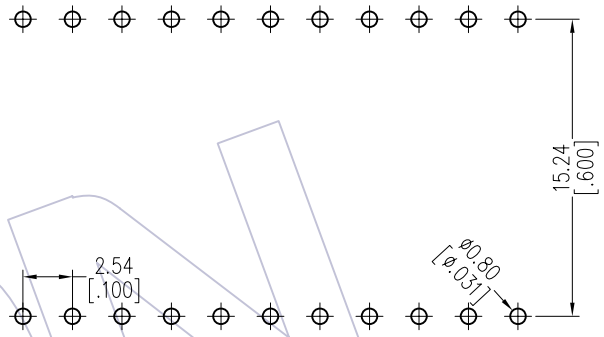

Ordering Information

7110-302 XX R XX 097 X 1

- Row of Pitch: 2=15.24mm
- No. of Pin: See tab
- Contact Plating: S0=Gold Flash/Tin, S3=10u"Gold/Tin, S4=15u"Gold/Tin, S5=30u"Gold/Tin, SN=Tin
- Pin Long: 097=9.7mm
- Packing: T=Tube, A=Tray

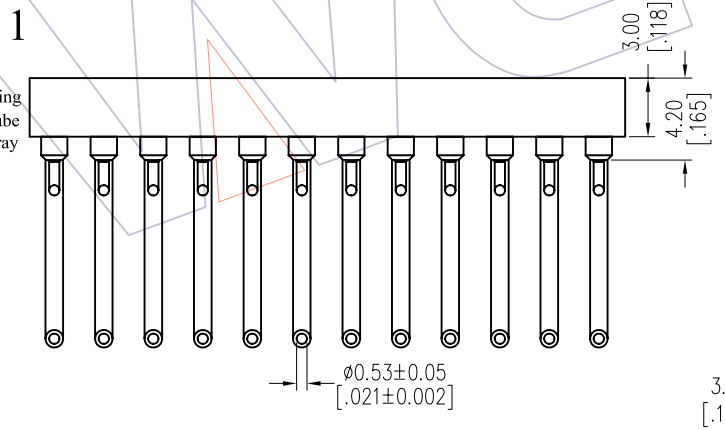

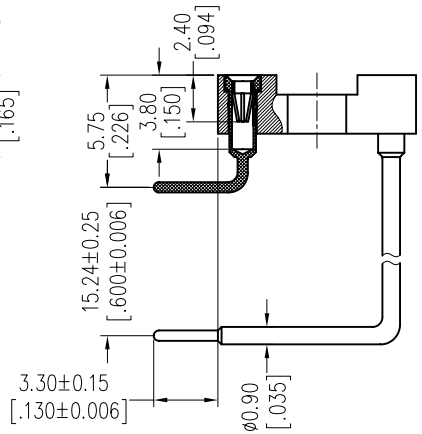

Dimensional & Ordering Information

NO.of Poles	Part No.	Dim A
24	7110−30224RXX097X1	30.48
28	7110−30228RXX097X1	35.56
32	7110−30232RXX097X1	40.64
36	7110−30236RXX097X1	45.72
40	7110−30240RXX097X1	50.80
42	7110−30242RXX097X1	53.34
48	7110−30248RXX097X1	60.96

REV	DATE	MODIFICATION DESCRIPTION	CHANGE
A0	2012/11/02	NEW	------

OPERATION	
X.X	±0.40
X.XX	±0.25
X.XXX	±0.15
Angle	± 3°
DIM	TOL

DRAW	JYHuang	DATE	2012/11/02
CHECK		DATE	
APPROVE		DATE	

SCALE	FIT
UNIT	mm
SIZE	A4
SHEET	1/1
PROJ.	

PART NO. 7110−302XXRXX097X1

TITLE: 2.54mm IC SOCKET 90° H=3.0 Row of Pitch 15.24mm

Customer NO.

WCON
Http: www.wcon.com

WCON−Dongguan
Tel: +86 769 85358920
Fax: +86 769 85358915
E-mail: sales@wcon.com

WCON−Kunshan
Tel: +86 512 57468408
Fax: +86 512 57468468
E-mail: salesks@wcon.com