# HSF

TECHNICAL SPECS:
Current Rating: 1.0AMP
Contact Resistance: 10mΩ Max
Dielectric Strength: Min 1000VRMS
Mechanical Life: Min 100 cycles
Connecting Pin: ø0.60mm
Operation Temperature: −40°C to+105°C

Contact Material: Brass CuZn36Pb3(C36000)
Contact plating: Au over Ni
Insulator Material: PPS+30%G.F(UL94V−0)
24P~32P Insulators with center one bar
36P~48P Insulators with center two bar

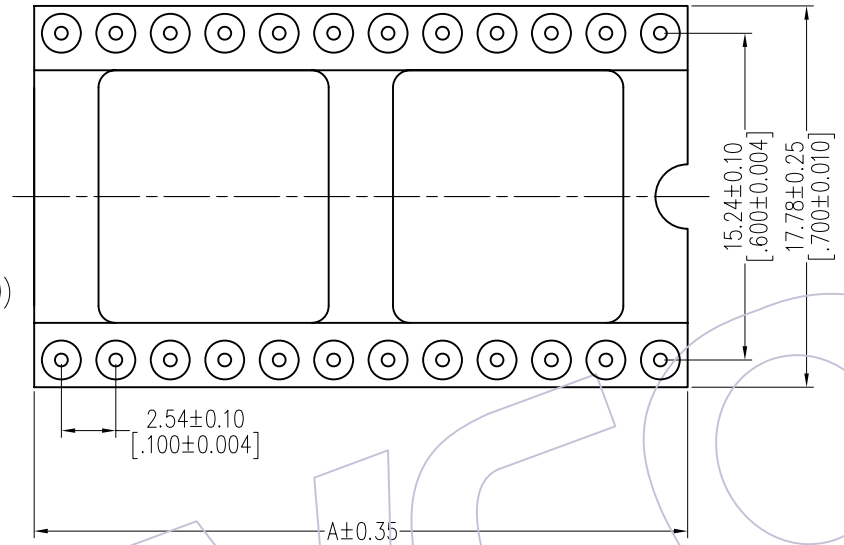


Recommended P.C.B Layout(Top Side)
(PCB BOARD TOLERANCE±0.05)

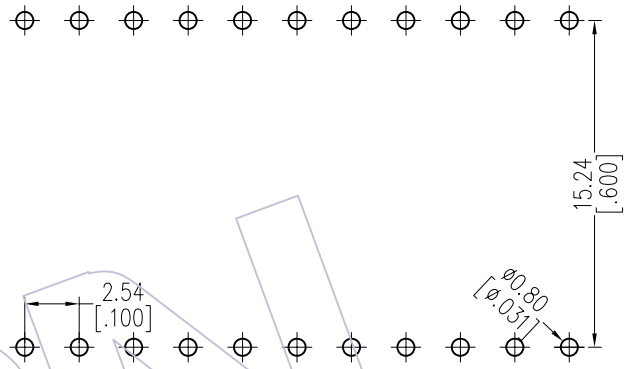


## *Ordering Information*

3560-302 XX S XX 137 X 1

- Row of Pitch: 2=15.24mm
- No. of Pin: See tab
- Contact Plating: G0=Gold Flash, G3=10u"Gold, G4=15u"Gold, G5=30u"Gold
- Packing: T=Tube, A=Tray

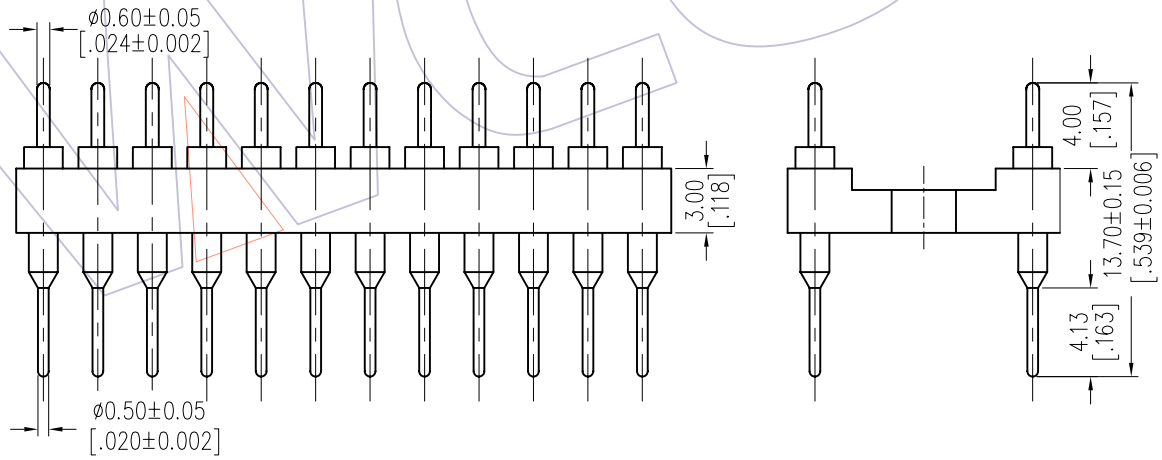


Dimensional & Ordering Information

| Poles | Part No. | Dim A |
|---|---|---|
| 24 | 3560−30224SXX137X1 | 30.48 |
| 28 | 3560−30228SXX137X1 | 35.56 |
| 32 | 3560−30232SXX137X1 | 40.64 |
| 36 | 3560−30236SXX137X1 | 45.72 |
| 40 | 3560−30240SXX137X1 | 50.80 |
| 42 | 3560−30242SXX137X1 | 53.34 |
| 48 | 3560−30248SXX137X1 | 60.96 |
| 50 | 3560−30250SXX137X1 | 63.50 |
| 52 | 3560−30252SXX137X1 | 66.04 |

| REV | DATE | MODIFICATION DESCRIPTION | CHANGE |
|---|---|---|---|
| A0 | 2012/11/05 | NEW | ------ |

| OPERATION | |
|---|---|
| X.X | ±0.40 |
| X.XX | ±0.25 |
| X.XXX | ±0.15 |
| Angle | ± 3° |
| DIM | TOL |

| | | | |
|---|---|---|---|
| DRAW | JYHuang | DATE | 2012/11/05 |
| CHECK | | DATE | |
| APPROVE | | DATE | |

| | |
|---|---|
| SCALE | FIT |
| UNIT | mm |
| SIZE | A4 |
| SHEET | 1/1 |
| PROJ. | |

PART NO. SEE TAB

TITLE: 2.54mm MACHINED ADAPTER CONNECTOR 180° H=3.0 L=13.7 Row of Pitch 15.24

Customer NO.


WCON
Http: www.wcon.com

WCON−Dongguan
Tel: +86 769 85358920
Fax: +86 769 85358915
E-mail: sales@wcon.com

WCON−Kunshan
Tel: +86 512 57468408
Fax: +86 512 57468468
E-mail: salesks@wcon.com