HSF

NOTES:
Current Rating: 3.0AMP
Contact Resistance: 20mΩ Max
Withstand Voltage: 500V AC/DC
Insulation Resistance: 1000MΩ Min
Operation Temperature: −55℃ to +105℃

Contact Material:Phosphor Bronze
Contact plating:Au Or Sn over Ni
Mating: 24−26AWG

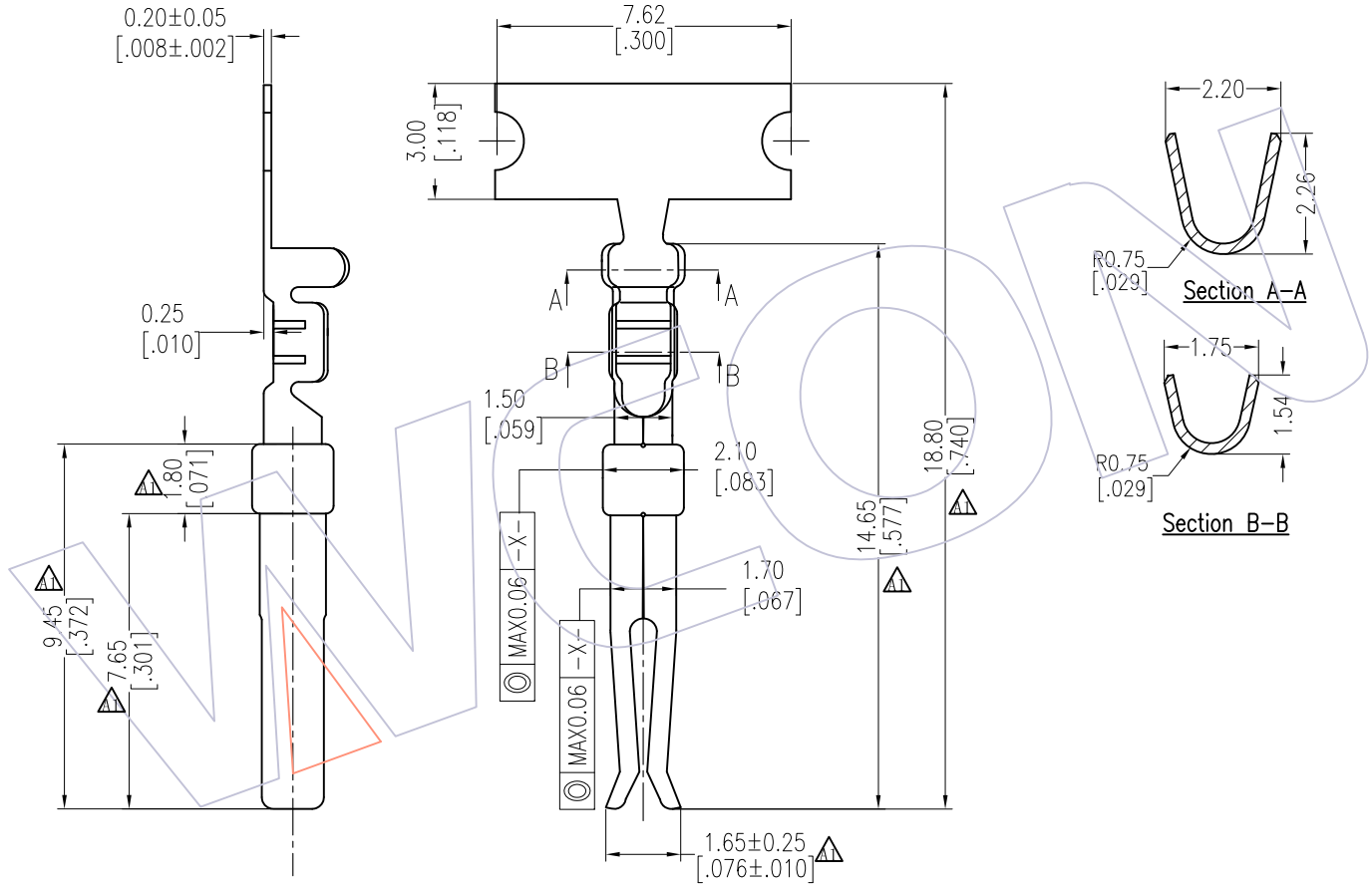

Ordering Information

T6221 - F C 0 P XX 01

Contact Material
P=Phosphor bronze

Contact Plating
S0=Gold Flash/Tin
S3=10u"Gold/Tin
S4=15u"Gold/Tin
S5=30u"Gold/Tin
SN=Tin

REV	DATE	MODIFICATION DESCRIPTION	CHANGE
A1	2016/08/25	Modify	△1
A0	2013/01/08	NEW	------

OPERATION	
X.X	±0.40
X.XX	±0.25
X.XXX	±0.15
Angle	± 3°
DIM	TOL

DRAW	Surong Xu	DATE	2016/08/25
CHECK		DATE	
APPROVE		DATE	

SCALE	FIT
UNIT	mm
SIZE	A4
SHEET	1/1
PROJ.	

PART NO. T6221−FC0PXX01

TITLE: D-SUB CONNECTOR CRIMP TYPE FEMALE TERMINAL

Customer NO.

WCON
Http: www.wcon.com

WCON−Dongguan
Tel: +86 769 85358920
Fax: +86 769 85358915
E−mail: sales@wcon.com

WCON−Kunshan
Tel: +86 512 57468408
Fax: +86 512 57468468
E−mail: salesks@wcon.com