HSF

NOTES:
Current Rating: 3.0AMP
Contact Resistance: 25mΩ Max
Withstand Voltage: 500V AC/DC
Insulation Resistance: 1000MΩ Min
Operation Temperature: −55℃ to +105℃

Contact Material:Brass
Contact plating:Au Or Sn over Ni
Insulator Material:PBT+30%G.F UL94V−0
Sheel:Cold Roller Steel,Ni Plated
Revit/Harpoon:Brass,Sn Over Ni Plated
Screw:Brass,Ni Plated

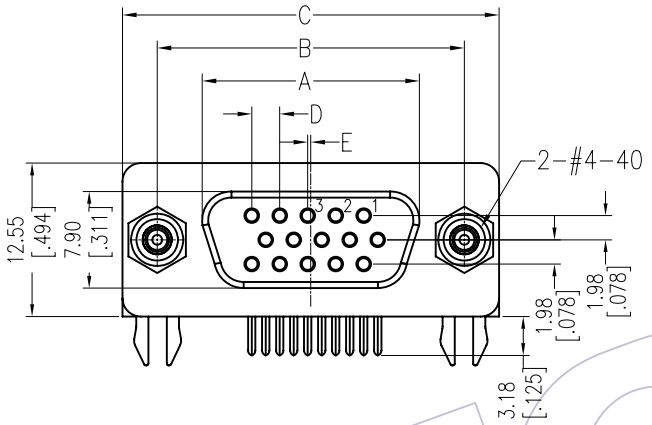

Recommended P.C.B Layout(Top Side)
(PCB BOARD TOLERANCE±0.05)

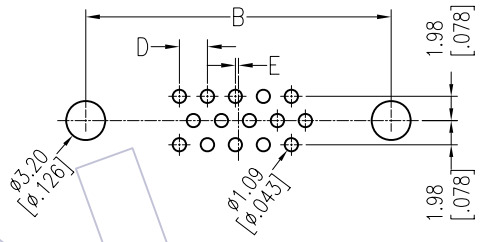

Ordering Information

6213A-XX F X N XX B 01

- No.of Pins: 15,26,44,62P
- Product Type: W=With Revit With Screw; M=With Revit Without Screw; S=No Revit Lock With Screw
- Contact Plating: S0=Gold Flash/Tin; S3=10u"Gold/Tin; S4=15u"Gold/Tin; S5=30u"Gold/Tin; SN=Tin
- Insulator Color: B:Black; U:Blue

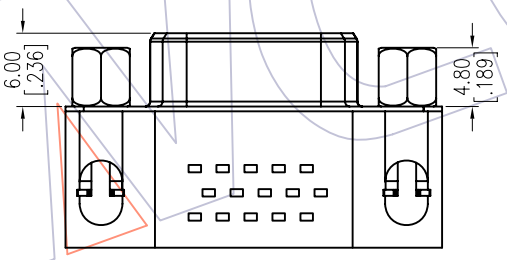

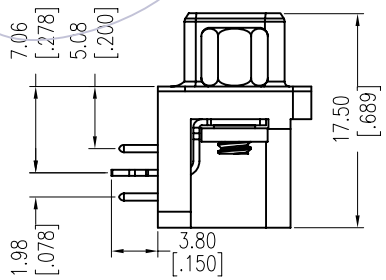

6213A-XXFWNXXB01

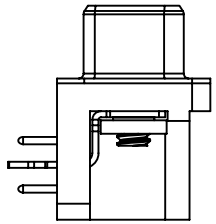

6213A-XXFMNXXB01

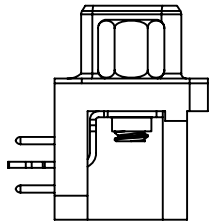

6213A-XXFSNXXB01

No. of Positions	DIM "A"	DIM "B"	DIM "C"	DIM "D"	DIM "E"
15	16.33	24.99	30.81	2.29	0.25
26	24.66	33.32	39.14	2.29	0.51
44	38.38	47.04	53.04	2.29	0.51
62	54.84	63.50	69.32	2.41	0.58

REV	DATE	MODIFICATION DESCRIPTION	CHANGE
A0	2012/12/04	NEW	------

OPERATION	
X.X	±0.40
X.XX	±0.25
X.XXX	±0.15
Angle	± 3°
DIM	TOL

DRAW	JYHuang	DATE	2012/12/04
CHECK		DATE	
APPROVE		DATE	

SCALE	FIT
UNIT	mm
SIZE	A4
SHEET	1/1
PROJ.	

PART NO. 6213A-XXFXNXXB01

TITLE: High density connector female 5.08mm footprint right angle type

Customer NO.

WCON
Http: www.wcon.com

WCON-Dongguan
Tel: +86 769 85358920
Fax: +86 769 85358915
E-mail: sales@wcon.com

WCON-Kunshan
Tel: +86 512 57468408
Fax: +86 512 57468468
E-mail: salesks@wcon.com