HSF

NOTES:
Rated Current:18.0 AMP
Contact Resistance:8 mΩ Max
Withstand Voltage:2000 V AC/DC
Insulation Resistance:1000 MΩ min
Operation Temperature:-40℃ to +105℃
Wire Range:30~12 AWG
Wire Strip Length: 7 mm
No.of Positions:2~20
Screw Counter Torsion Force: 4.4 lbf.in Min.

Terminal Material:Phosphor Bronze
Terminal Plating:Matte Tin Plated Over Nickel
Pin Block Materinal:Brass
Pin Block Plating:Nickel Plated Over All
Screw Materinal: Steel
Screw Plating:Nickel Plated Over All
Up Cover Material:PA66 UL94 V-0
Below Cover Material:PA66 UL94 V-0

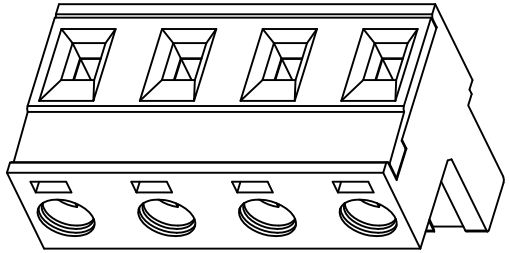

3D VIEW(REF.)
SCALE 1:1

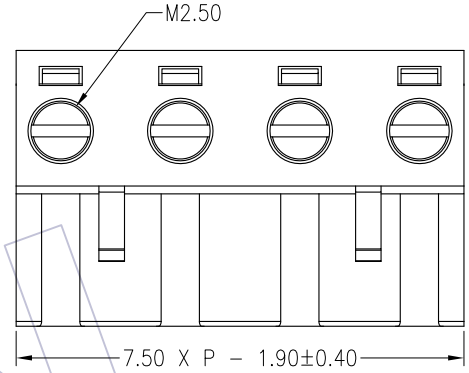

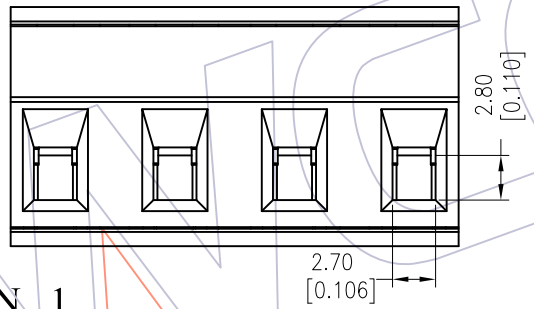

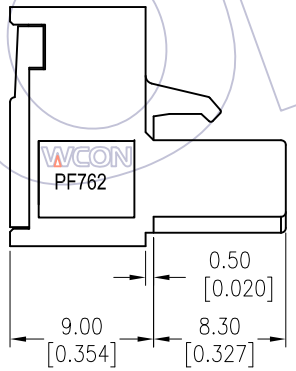

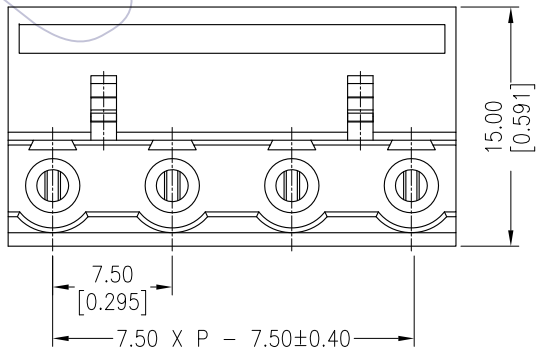

Ordering Information:

P F 750 - C XX A SM N 1

- F: F=Female
- 750: Picth 750=7.50
- XX: No.of Pins 02-20P
- A: Color A=Green
- SM: Contact Plated SM=Matte Tin
- N: Type N=Without Screw

REV	DATE	MODIFICATION DESCRIPTION	CHANGE
A0	2013/11/08	NEW	——

OPERATION	
X.X	±0.40
X.XX	±0.25
X.XXX	±0.15
Angle	± 3°
DIM	TOL

DRAW	Tsingsn	DATE	2013/11/08
CHECK		DATE	
APPROVE		DATE	

SCALE	FIT
UNIT	mm / inch
SIZE	A4
SHEET	1/1
PROJ.	

PART NO. PF750-CXXASMN1

TITLE: 7.50mm Pitch Female Pluggable Terminal Blocks

Customer NO.

WCON
Http: www.wcon.com

WCON-Dongguan
Tel: +86 769 85358920
Fax: +86 769 85358915
E-mail: sales@wcon.com

WCON-Kunshan
Tel: +86 512 57468408
Fax: +86 512 57468468
E-mail: salesks@wcon.com