HSF

NOTES:
Rated Current:3.0AMP
Contact Resistance:20mΩ max
Withstand Voltage:500V AC/DC
Insulation Resistance:1000MΩ min
Operation Temperature:−40℃ to +105℃

Housing Material:PA9T+30%GF(UL94V−0)
Latch Material:PA9T+30%GF(UL94V−0)
Contact Material:Brass
Contact plating:Au or Sn over Ni Plated
Fixed Axle Material:Brass
Fixed Axle plating:Ni Plated

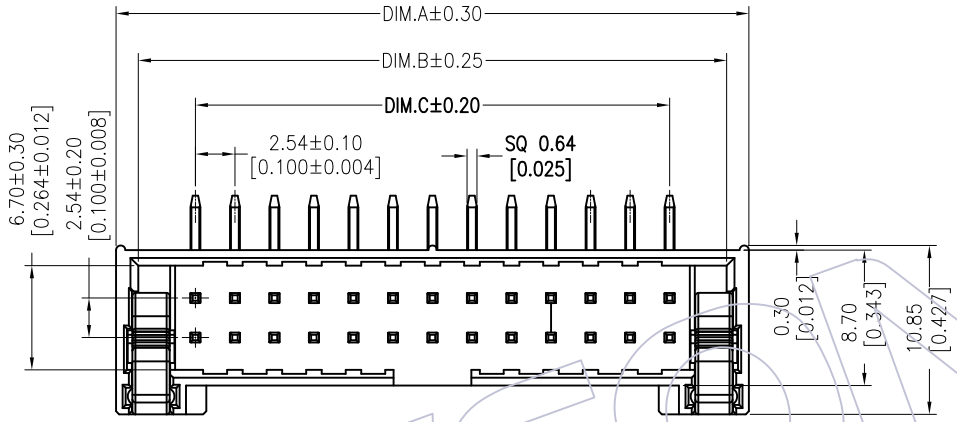

Recommended P.C.B Layout(Top Side)
(PCB BOARD TOLERANCE±0.05)

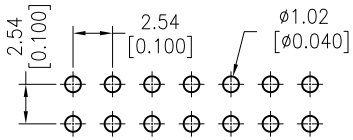

Ordering Information

3212 - XX R XX B X X 1

- No.of Pins: 10 14 16 20 26 30 34 40 50 60 64
- Contact Plating: S0=Gold Flash/Tin; S1=3u"Gold/Tin; S2=5u"Gold/Tin; S3=10u"Gold/Tin; S4=15u"Gold/Tin; S5=30u"Gold/Tin
- Insulator Color: B=Black
- Latch Type: L=Long Latch; S=Short Latch
- Packing: T=Tube; A=Tray

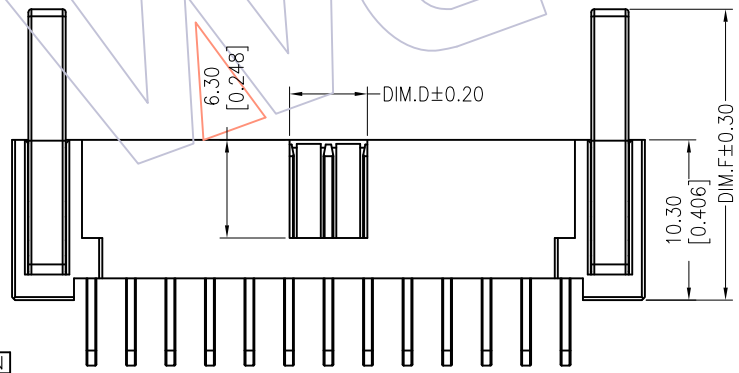

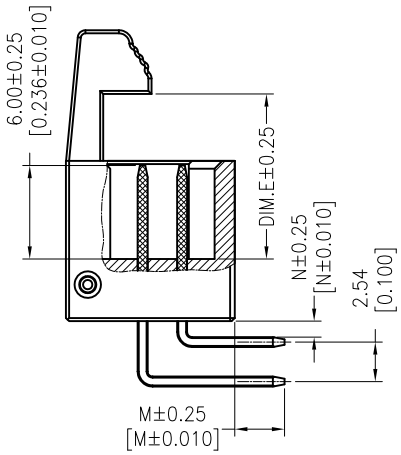

No.Of POSITION	DIM.A	DIM.B	DIM.C	DIM.D
6	15.28	12.42	5.08	2.30
8	17.82	14.96	7.62	2.30
10	20.36	17.50	10.16	5.00
12	22.90	20.04	12.70	5.00
14	25.44	22.58	15.24	5.00
16	27.98	25.12	17.78	5.00
20	33.06	30.20	22.86	5.00
24	38.14	35.28	27.94	5.00
26	40.68	37.82	30.48	5.00
30	45.76	42.90	35.56	5.00
34	50.84	47.98	40.64	5.00
40	58.46	55.60	48.26	5.00
50	71.16	68.30	60.96	5.00
60	83.86	81.00	73.66	5.00
64	88.94	86.08	78.74	5.00

Item	DIM.M	DIM.N
Standard	3.20	1.02
Alternate	---	---

PART NO.	DIM.E	DIM.F
3212−XXRXXBLX1	14.60	22.10
3212−XXRXXBSX1	10.60	18.70

REV	DATE	MODIFICATION DESCRIPTION	CHANGE
A0	2015/02/09	NEW	——

OPERATION	
X.X	±0.40
X.XX	±0.25
X.XXX	±0.15
Angle	± 3°
DIM	TOL

DRAW	Allen	DATE	2015/02/09
CHECK		DATE	
APPROVE		DATE	

SCALE	FIT
UNIT	mm / inch
SIZE	A4
SHEET	1/1
PROJ.	

PART NO. 3212−XXRXXBXX1

TITLE: 2.54mm EJECTOR HEADER 90° DIP TYPE

Customer NO.

WCON
Http: www.wcon.com

WCON−Dongguan
Tel: +86 769 85358920
Fax: +86 769 85358915
E-mail: sales@wcon.com

WCON−Kunshan
Tel: +86 512 57468408
Fax: +86 512 57468468
E-mail: salesks@wcon.com