HSF

NOTES:
Current Rating:1A AMP
Contact Resistance:20milliohm Max
Withstand Voltage:500V AC/DC
Insulation Resistance:1000Megohm Min
Operation Temperature:-40℃ to +105℃

Housing Material:PA9T+30%GF(UL94V-0)
Below Cover Material:PA9T+30%GF(UL94V-0)
Contact Material:Brass
Contact plating:Au or Sn over Ni Plating

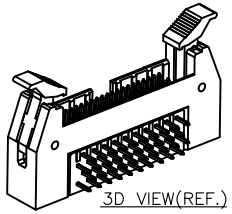

3D VIEW(REF.)
SCALE 1:2

Recommended P.C.B Layout (Top Side)
(PCB BOARD TOLERANCE ± 0.05)

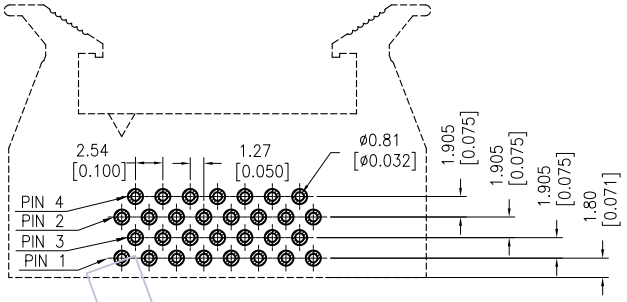

10、26、30、34、50PIN

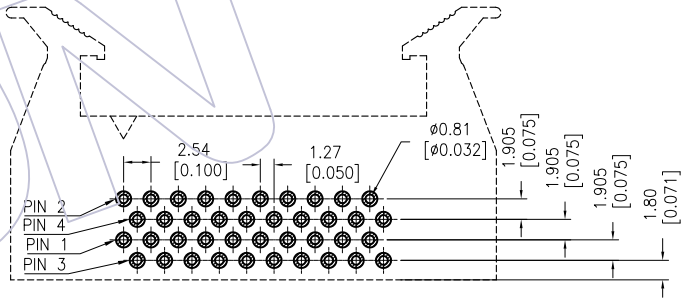

20、40、60、68、80、100PIN

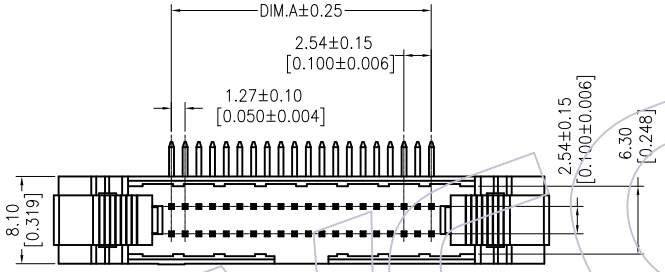

Ordering Information

3242-XX R XX B S T 1

No.of Pins	Contact Plating	Color Insulator	Packing
10 34	G0=Gold Flash	B=Black	T=Tube
14 40	G3=10u"Gold		
16 44	G4=15u"Gold		
20 50	G5=30u"Gold		
24 60	S0=Gold Flash/Tin		
26 64	S3=10u"Gold/Tin		
30 80	S4=15u"Gold/Tin		
32 100	S5=30u"Gold/Tin		
	SN=Tin		

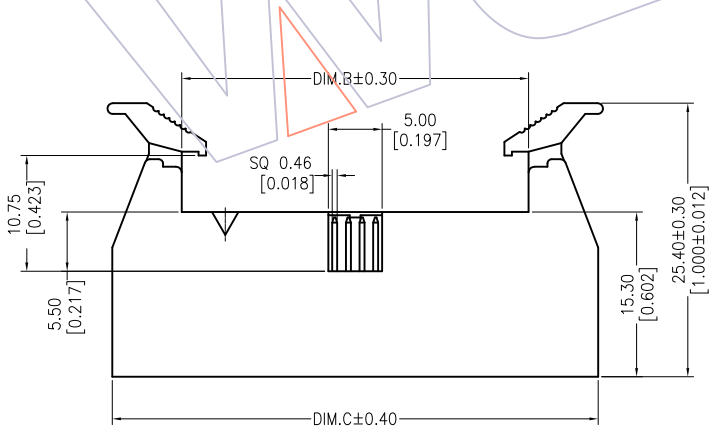

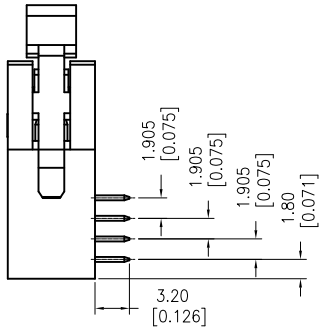

No.Of POSITION	DIM.A	DIM.B	DIM.C
10	5.08	13.15	26.06
20	11.43	19.50	32.41
26	15.24	23.31	36.22
30	17.78	25.85	38.76
34	20.32	28.39	41.30
40	24.13	32.20	45.11
50	30.48	38.55	51.46
60	36.83	44.90	57.81
68	41.91	49.98	62.89
80	49.53	57.60	70.51
100	62.23	70.30	83.21

REV	DATE	MODIFICATION DESCRIPTION	CHANGE
A0	2013/11/21	NEW	——

OPERATION	
X.X	±0.40
X.XX	±0.25
X.XXX	±0.15
Angle	± 3°
DIM	TOL

DRAW	Tsingsn	DATE	2013/11/21
CHECK		DATE	
APPROVE		DATE	

SCALE	FIT
UNIT	mm / inch
SIZE	A4
SHEET	1/1
PROJ.	

PART NO. 3242-XXRXXBST1

TITLE: 1.27*2.54 EJECTOR HEADER SHORT LATCH 90° DIP

Customer NO.

WCON
Http: www.wcon.com

WCON-Dongguan
Tel: +86 769 85358920
Fax: +86 769 85358915
E-mail: sales@wcon.com

WCON-Kunshan
Tel: +86 512 57468408
Fax: +86 512 57468468
E-mail: salesks@wcon.com